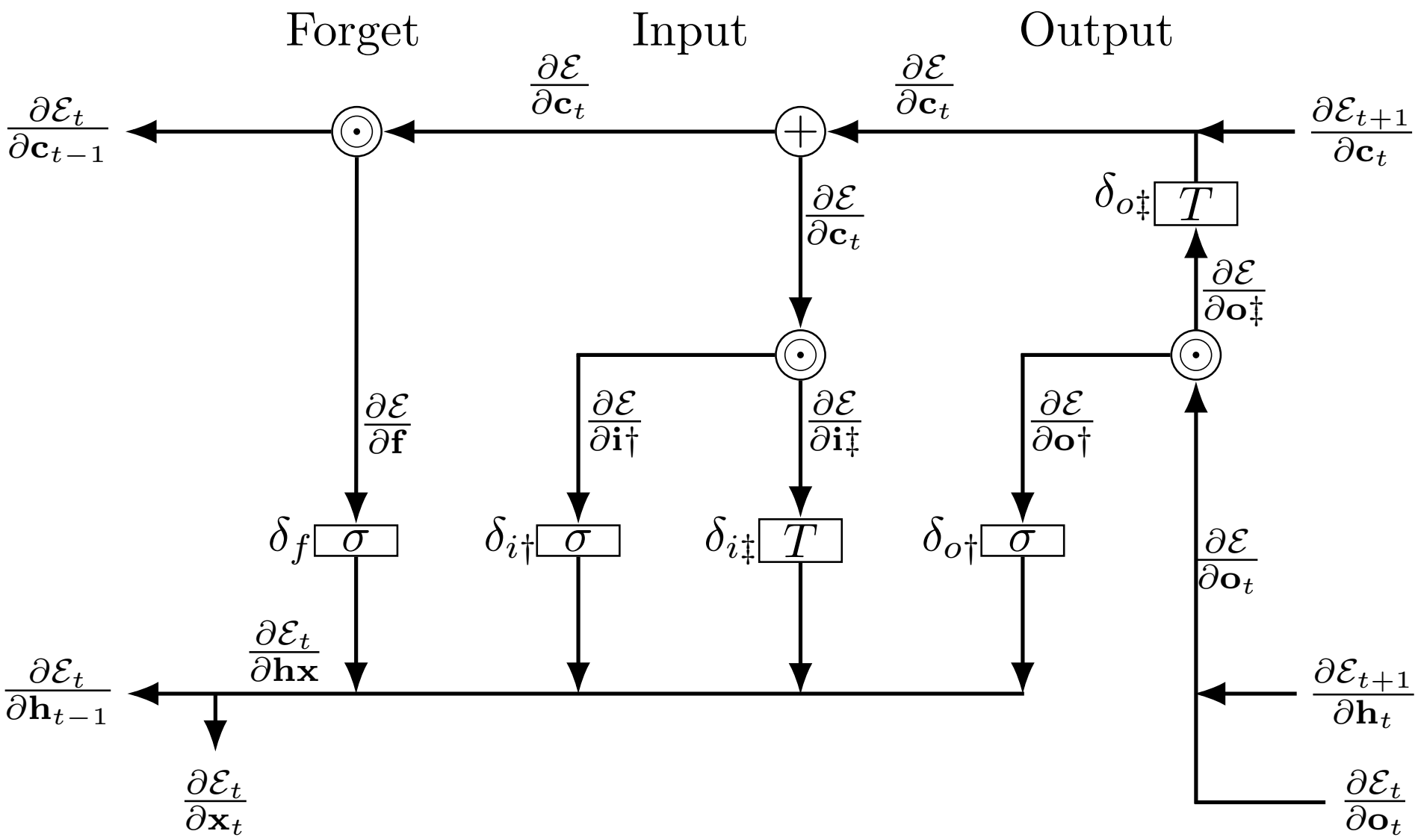
Forget
Input
Output
$\frac{\partial \mathcal{E}_t}{\partial \mathbf{c}_{t-1}}$
$\frac{\partial \mathcal{E}}{\partial \mathbf{c}_t}$
$\frac{\partial \mathcal{E}}{\partial \mathbf{c}_t}$
$\frac{\partial \mathcal{E}_{t+1}}{\partial \mathbf{c}_t}$
$\frac{\partial \mathcal{E}}{\partial \mathbf{c}_t}$
$\delta_{o\ddagger}$ T
$\frac{\partial \mathcal{E}}{\partial \mathbf{o}\ddagger}$
$\frac{\partial \mathcal{E}}{\partial \mathbf{f}}$
$\frac{\partial \mathcal{E}}{\partial \mathbf{i}\dagger}$
$\frac{\partial \mathcal{E}}{\partial \mathbf{i}\ddagger}$
$\frac{\partial \mathcal{E}}{\partial \mathbf{o}\dagger}$
δ_f σ
$\delta_{i\dagger}$ σ
$\delta_{i\ddagger}$ T
$\delta_{o\dagger}$ σ
$\frac{\partial \mathcal{E}}{\partial \mathbf{o}_t}$
$\frac{\partial \mathcal{E}_t}{\partial \mathbf{hx}}$
$\frac{\partial \mathcal{E}_t}{\partial \mathbf{h}_{t-1}}$
$\frac{\partial \mathcal{E}_{t+1}}{\partial \mathbf{h}_t}$
$\frac{\partial \mathcal{E}_t}{\partial \mathbf{x}_t}$
$\frac{\partial \mathcal{E}_t}{\partial \mathbf{o}_t}$